T.O TABLE

DESCRIPTION

T.O celebrates and reinforces the importance of light as a pillar of our daily life. A monolithic column stands to support a horizontal and vertical line of light to provide precise light control in all directions. T.O embodies a harmonious dialogue between solidity and lightness offering unlimited contexts for use in residential and workplace environments, all within a minimal footprint. T.O features a fully dimmable LED light source with tactile push switch appropriately positioned at the end of arm. Both table and floor versions feature a magnetically attached light arm over a marble cylinder base while the light wand can be rotated up to 360 degrees to provide both direct and indirect light for task and ambient lighting needs alike. T.O is offered in 2 matte base finishes in Marquina black and Carrara white while the light arm is elegantly contrasted in polished surfaces in brass and chrome. T.O is a seamless integration of functional lighting and sculpture.

FIXTURE TYPE
Table

LIGHT SOURCE
High output LED array

PRODUCT CODES

T.O Table (Black Marble/Brass)	TO TBL BLK/BRA
T.O Table (Black Marble/Chrome)	TO TBL BLK/CRM
T.O Table (White Marble/Brass)	TO TBL WHT/BRA
T.O Table (White Marble/Chrome)	TO TBL WHT/CRM

LIGHT CONTROL
Mechanical push button
Full range dimming (100-10%)
2-stage dimming (100/40%)

FEATURES
360° arm rotation
Advanced LED array eliminates multiple shadows

SPECIFICATIONS
Voltage : 120-240V 50/60Hz
Power Consumption : 4.5W
Color Temperature : 3000K
Luminosity : 300 Lumens
Luminaire efficacy : 67 Lumens/Watt
Color Rendition Index: 90 CRI
Cable length: 6′ (1.8m)

CERTIFICATIONS
Intertek

PACKAGING WEIGHT AND DIMENSIONS

T.O Table:	8LBS	6″ X 6″ X 15.75″
	3.6KG	15cm X 15cm X 40cm

NOTES
Custom requests can be considered on volume orders.

FINISHES

BASE

MARQUINA BLACK

CARRARA WHITE

ARM

BRASS

CHROME

DIMENSIONS

T.O TABLE

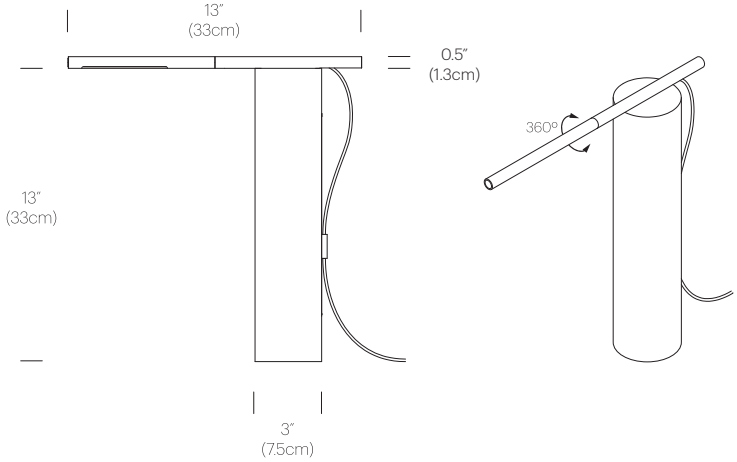

Pablo