HINKLEY

Hardy Island 12V Large LED Path Light

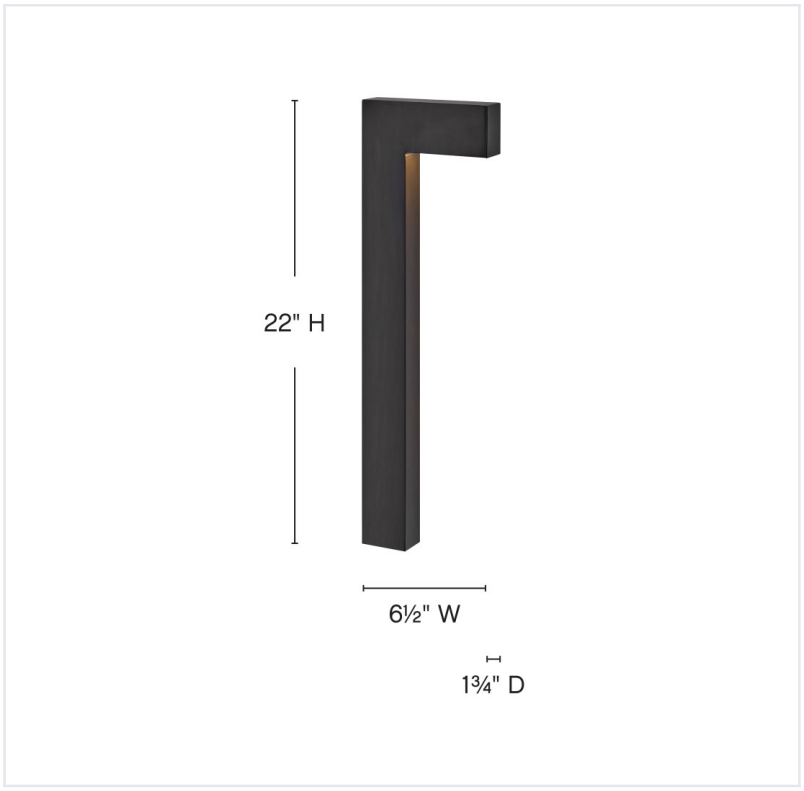







PRODUCT DETAILS

- Part of the Hardy Island Collection, constructed with solid cast brass for impeccable weather resistance
- Hardy Island Series products carry a lifetime limited warranty
- 12V lighting systems consume less energy, leading to lower electricity bills and a reduced carbon footprint
- Add style and safety to outdoor walkways; place about 6 feet apart from one another
- Bold lines and a clean, minimalist style complement contemporary architecture
- Dimmable lamping creates the ideal setting for any occasion
- The Hinkley Home Automation App allows you to control your landscape lights anytime, anywhere.
- Wet Rated

SKU: 1518BSK-LL

Atlantis features a minimalist design with bold, clean lines to complement contemporary architecture with ultimate urban sophistication.

DETAILS

Finish: Brass Satin Black

Material: Brass

Glass: Etched Lens

Dimmable: Yes - with MLV on Transformer Primary

DIMENSIONS

Width: 6.5"

Height: 22.0"

Depth: 1.8

Weight: 5.2lb

LIGHT SOURCE

Light Source: Socketed

Wattage: 1-1.50w Mini Wedge LED *Included

Voltage: 12v

MOUNTING

Lead Wire: 1 X 36“

SHIPPING

Carton Length: 24.5"

Carton Width: 9.0"

Carton Height: 4.3"

Carton Weight: 6.3lb

- LED bulb included - safer for the environment and a longer lifespan than incandescent bulbs
- LED Bulbs carry a 3-year limited warranty
- A wiring kit is supplied
- Supplied with a larger ground spike to properly support the fixture’s weight