ITEM: 9000-1494

Overall Dimensions

Height: 27.5″
Diameter: 26.75″

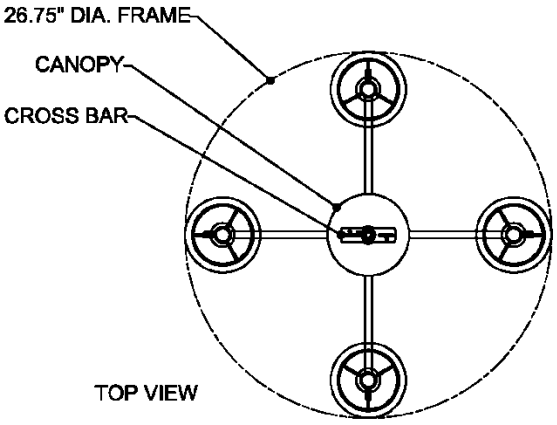

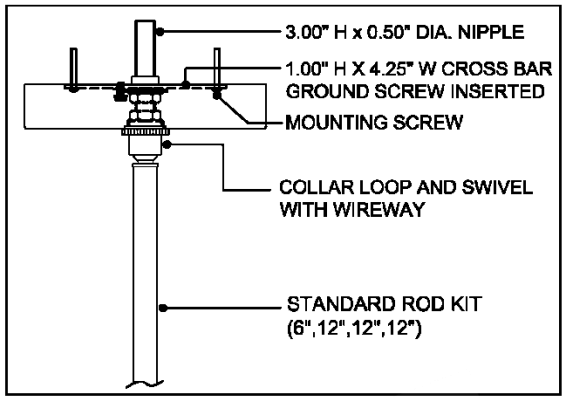

CANOPY DETAIL

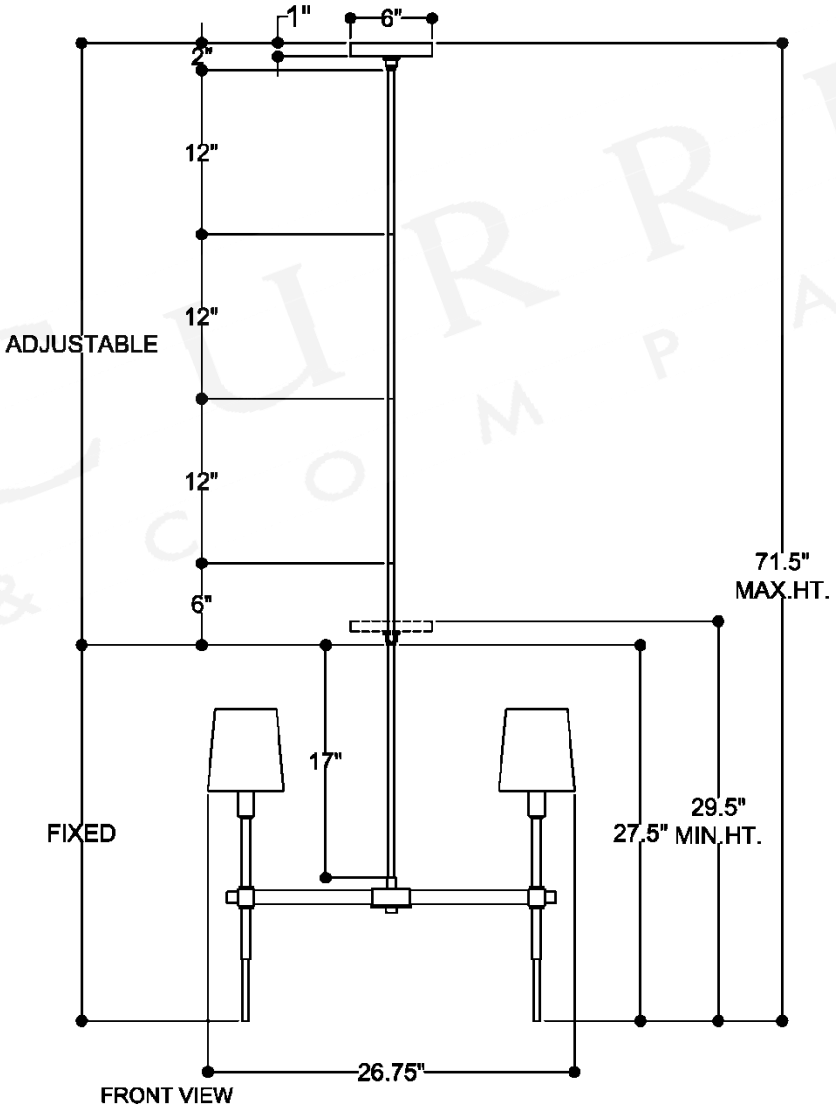

ALL WORK © CURREY & COMPANY