ITEM: 9000-1493

Overall Dimensions

Height: 19.375″
Diameter: 12.25″

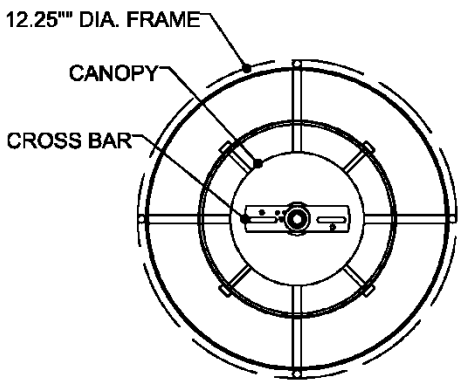

TOP VIEW

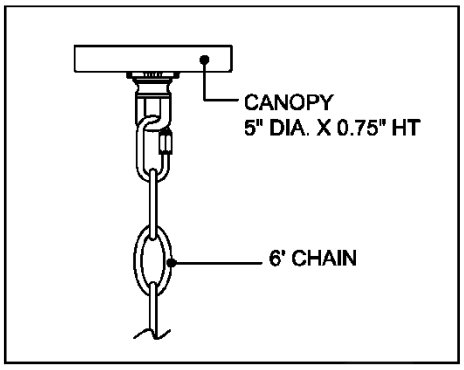

CANOPY DETAIL

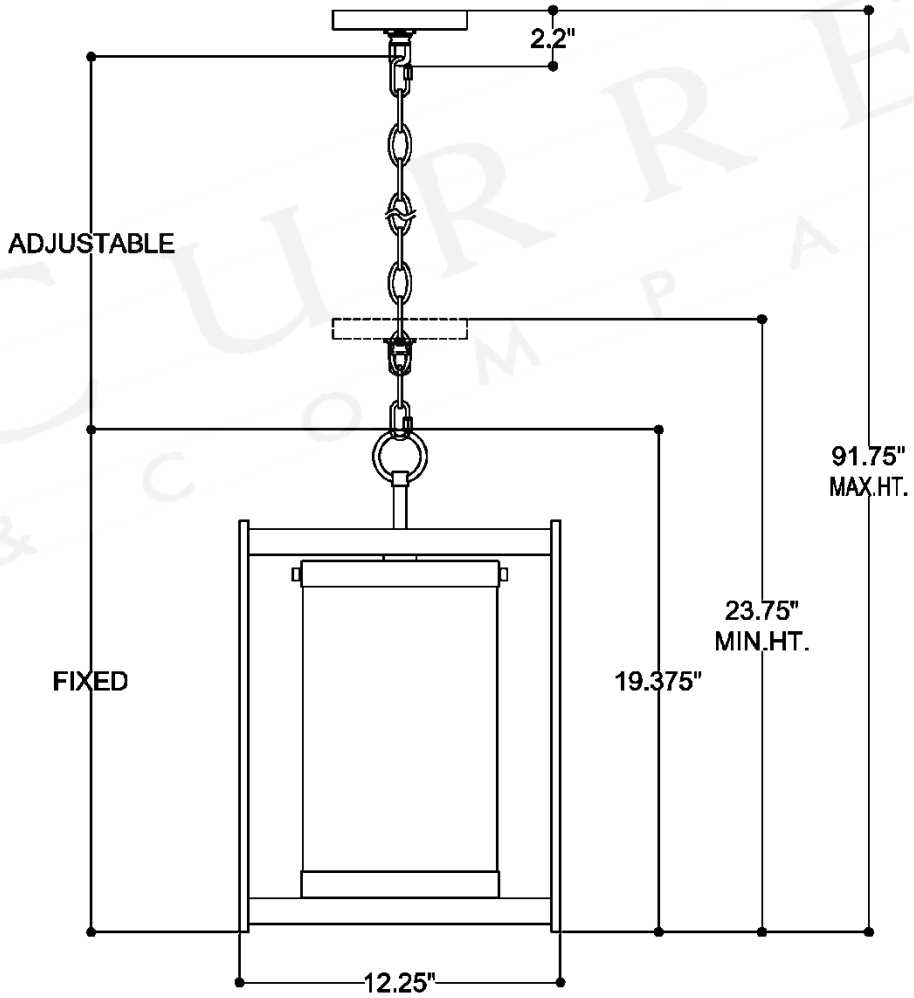

FRONT VIEW

ALL WORK © CURREY & COMPANY