ITEM: 9000-1487
9000-1488

Overall Dimensions

Height: 29″
Width: 24.5″
Depth: 24.5″

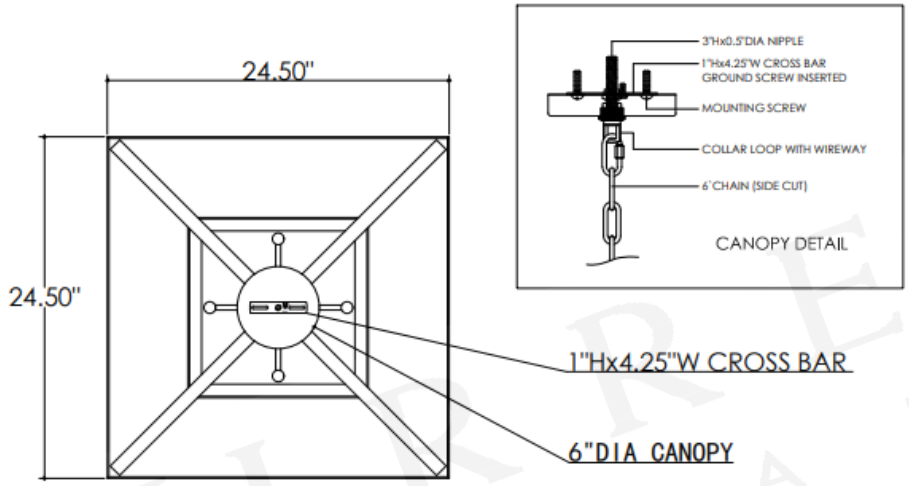

TOP VIEW

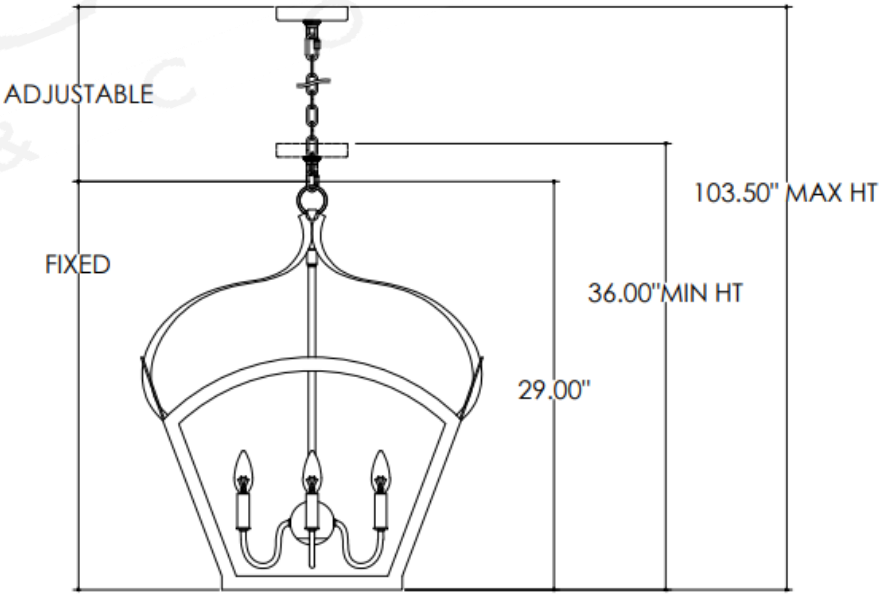

FRONT VIEW

ALL WORK © CURREY & COMPANY