ITEM: 9000-1482

Overall Dimensions

Height: 16.5″
Diameter: 29.25″

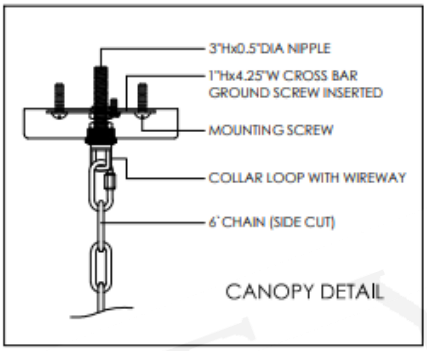

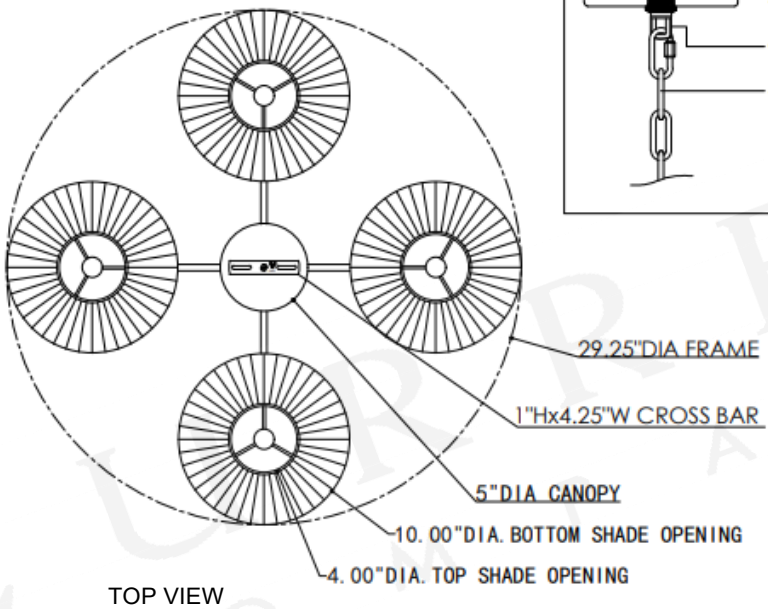

TOP VIEW

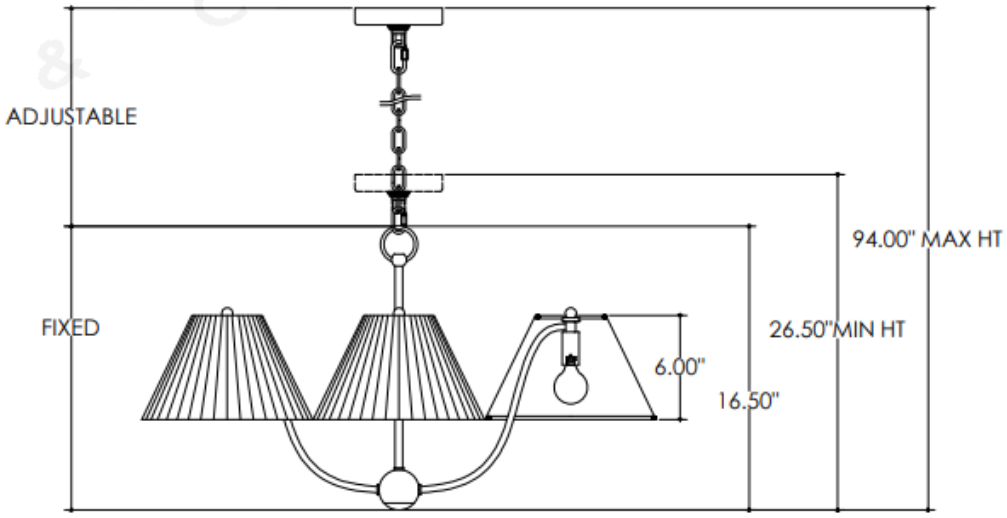

FRONT VIEW

ALL WORK © CURREY & COMPANY