ITEM: 6000-0029

Overall Dimensions

Height: 15″
Width: 12″
Depth: 9.75″

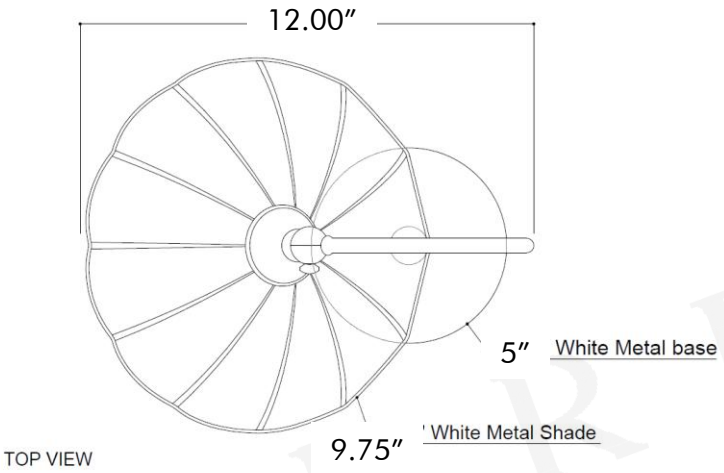

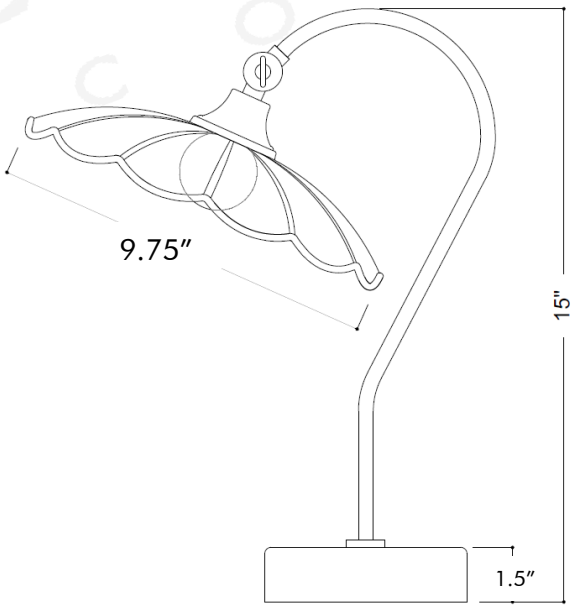

FRONT VIEW

ALL WORK © CURREY & COMPANY