ITEM: 6700-0028

Overall Dimensions

Height: 12.25″
Width: 15″
Depth: 7″

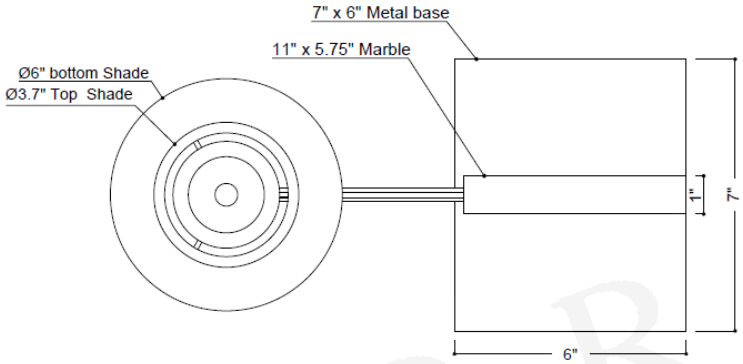

TOP VIEW

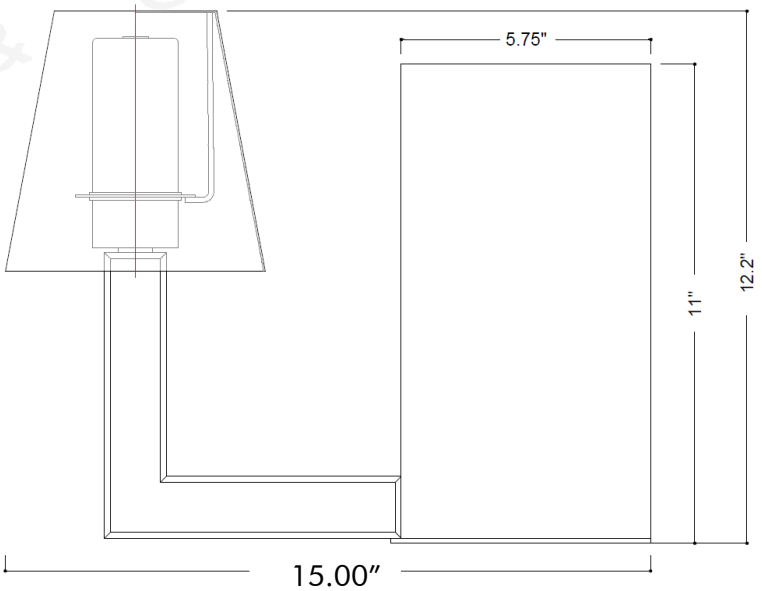

FRONT VIEW

ALL WORK © CURREY & COMPANY