ITEM: 6000-1126

Overall Dimensions

Height: 27″
Diameter: 16″

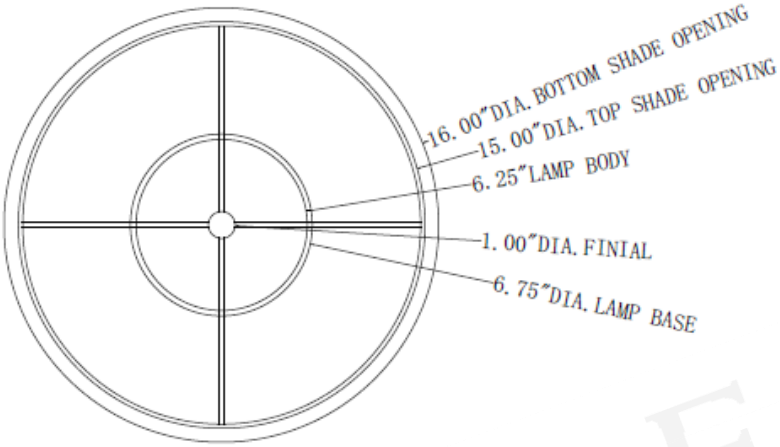

TOP VIEW

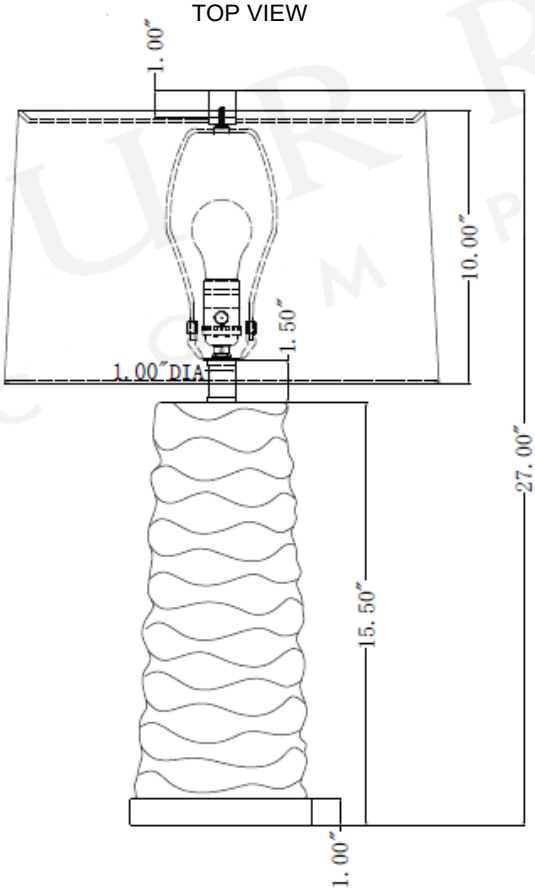

FRONT VIEW

ALL WORK © CURREY & COMPANY