ITEM: 6000-1125

Overall Dimensions

Height: 29″
Diameter: 16″

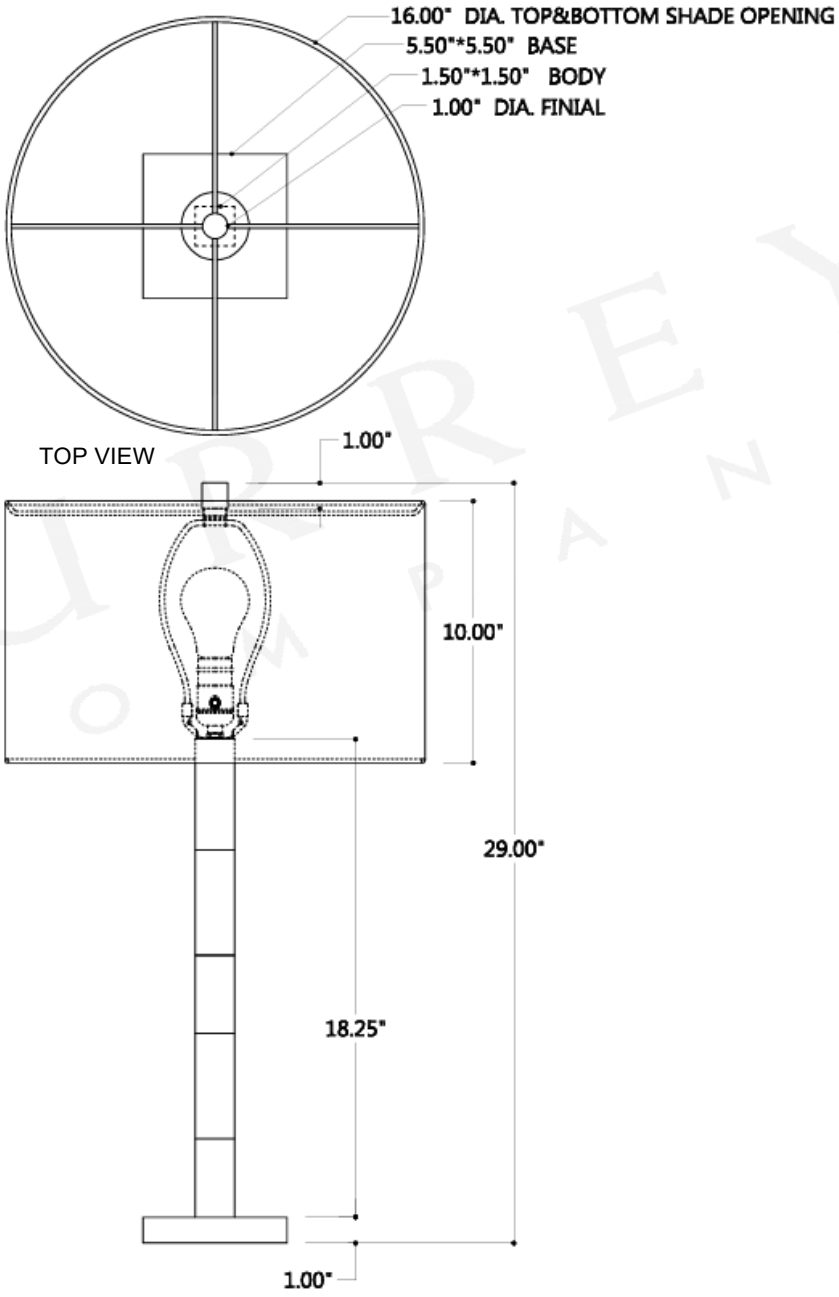

ALL WORK © CURREY & COMPANY