ITEM: 6000-1124

Overall Dimensions

Height: 29.75″
Diameter: 17″

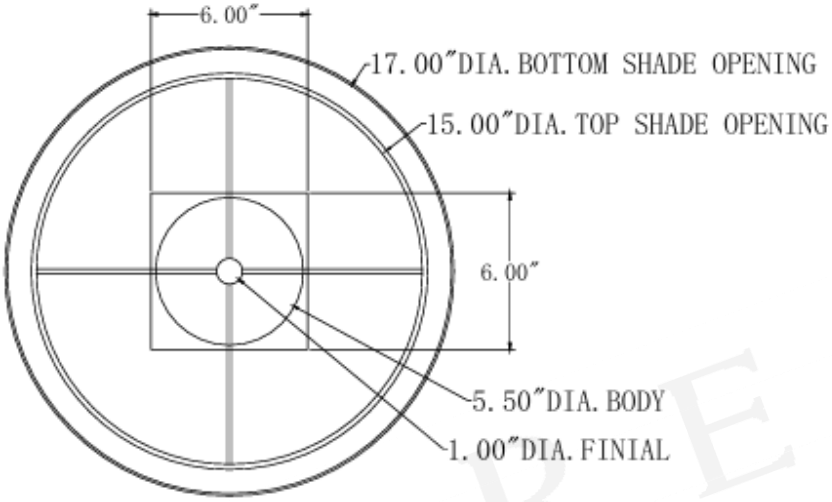

TOP VIEW

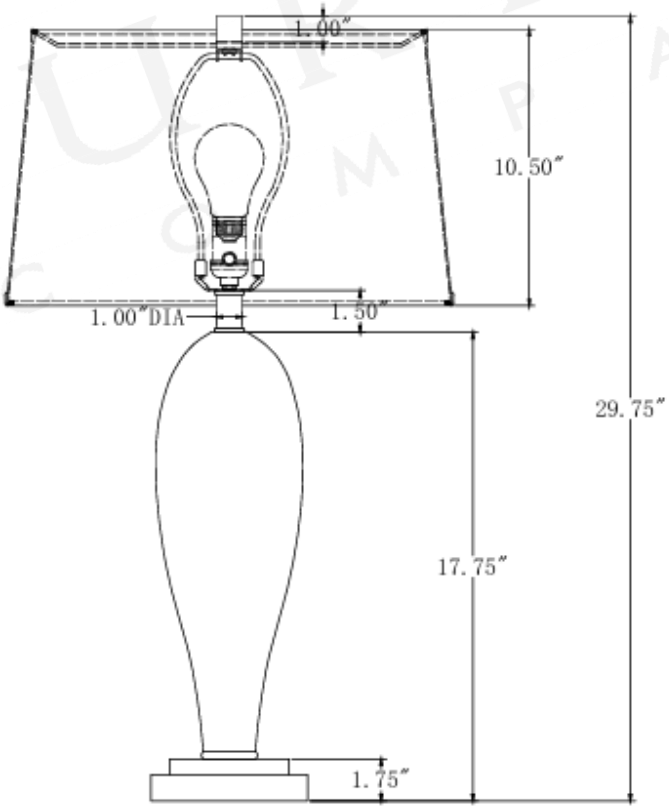

FRONT VIEW

ALL WORK © CURREY & COMPANY