ITEM: 6000-1122

Overall Dimensions

Height: 26.75″
Diameter: 15″

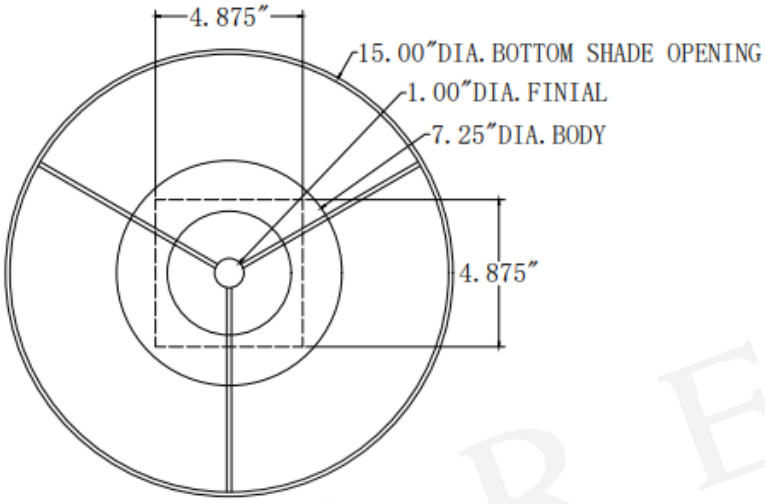

TOP VIEW

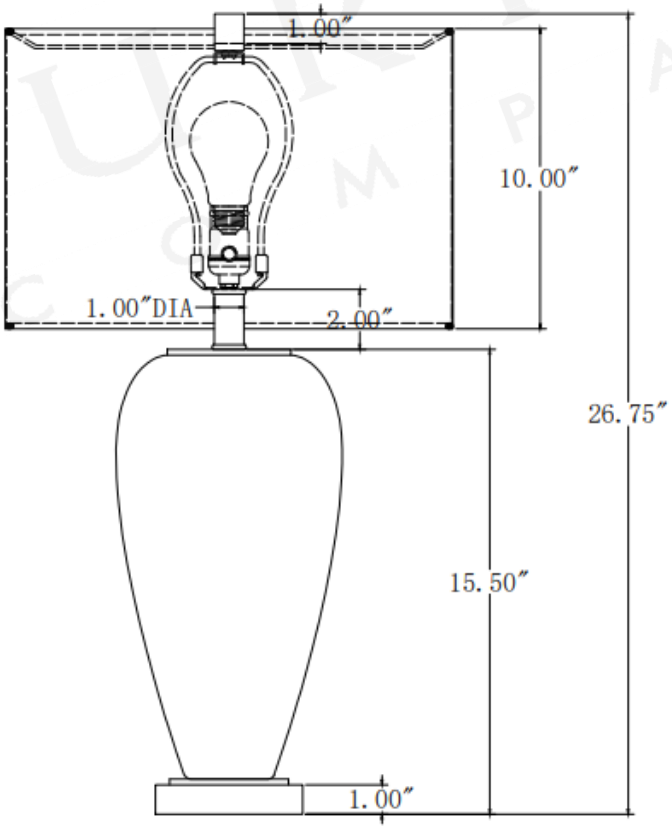

FRONT VIEW

ALL WORK © CURREY & COMPANY