ITEM: 6000-1121

Overall Dimensions

Height: 26.5″
Diameter: 15.5″

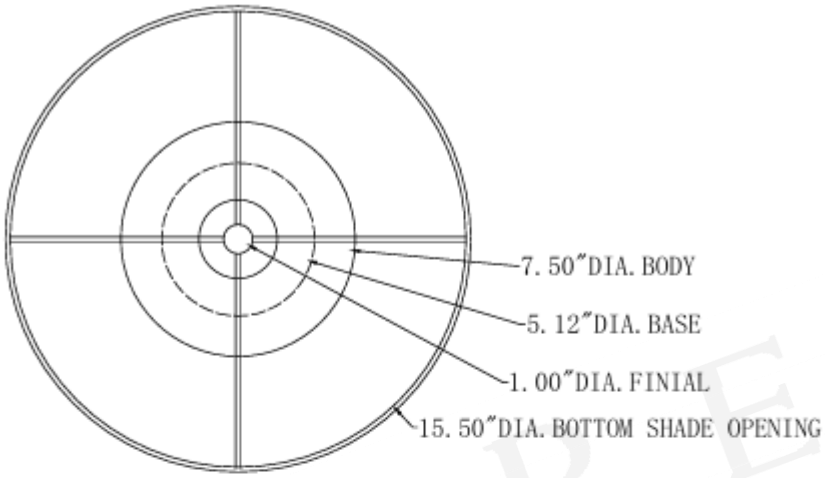

TOP VIEW

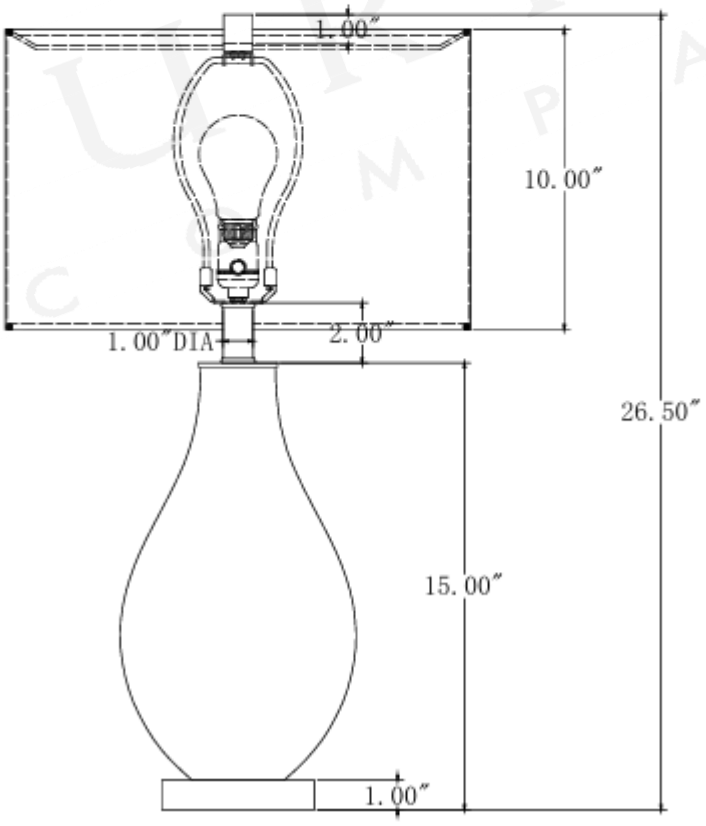

FRONT VIEW

ALL WORK © CURREY & COMPANY