ITEM: 6000-1119

Overall Dimensions

Height: 29.25″
Diameter: 16″

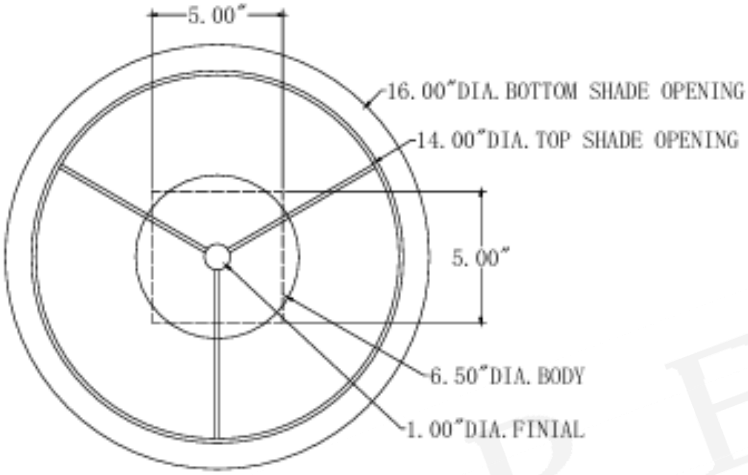

TOP VIEW

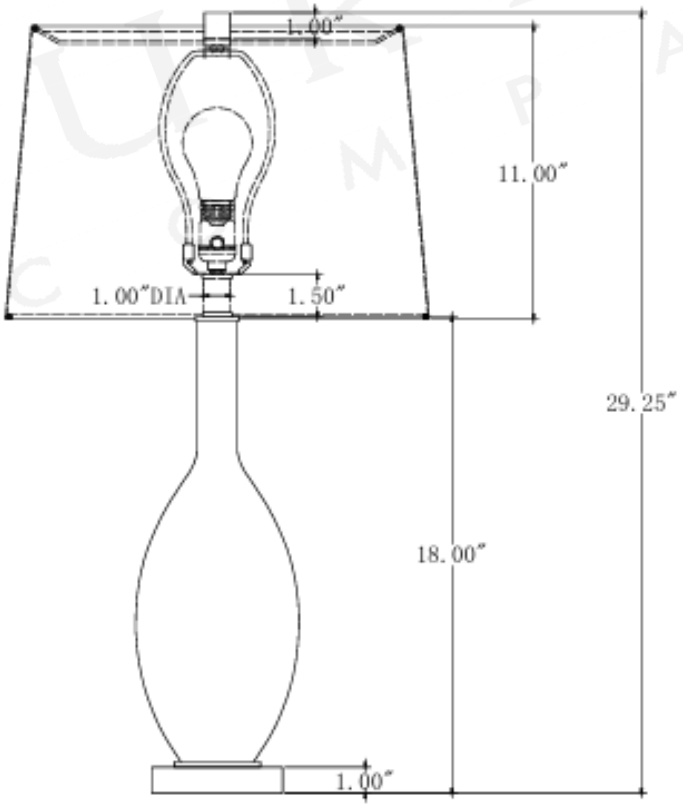

FRONT VIEW

ALL WORK © CURREY & COMPANY