ITEM: 6000-1118

Overall Dimensions

Height: 27.5″
Diameter: 16.5″

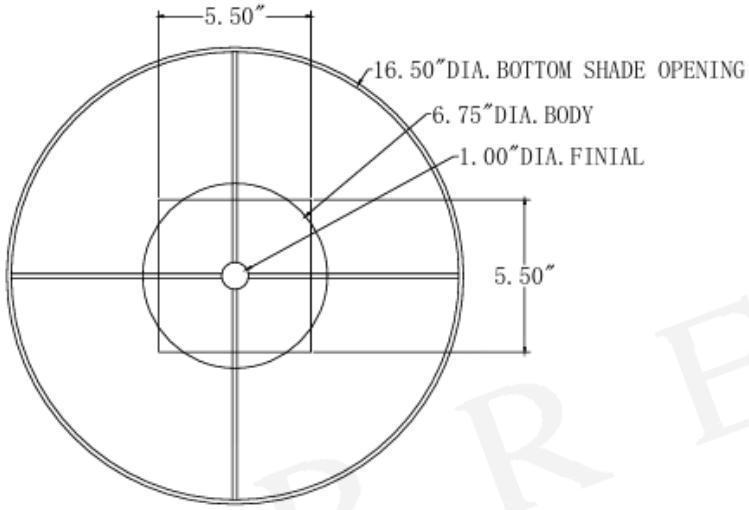

TOP VIEW

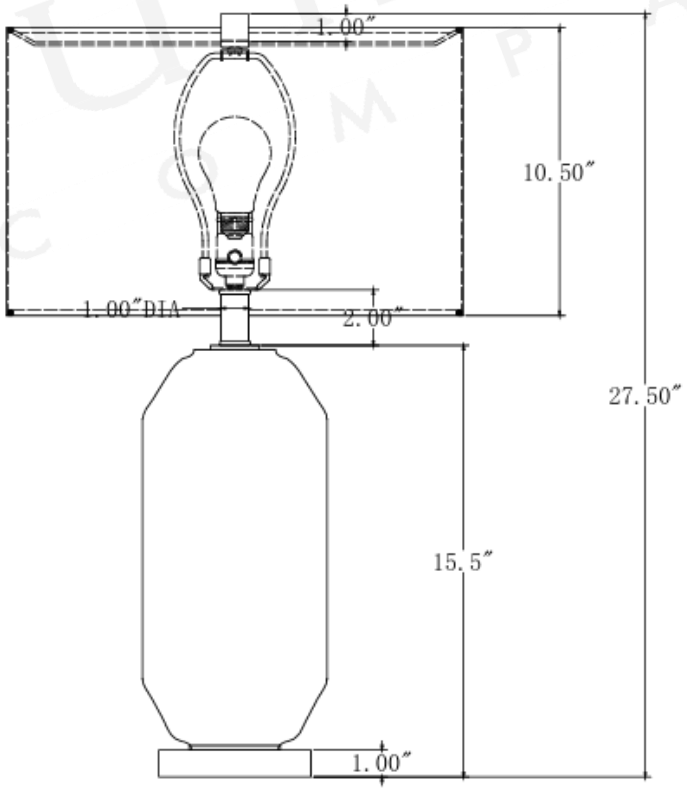

FRONT VIEW

ALL WORK © CURREY & COMPANY