ITEM: 6000-1083

Overall Dimensions

Height: 28.75″
Diameter: 18″

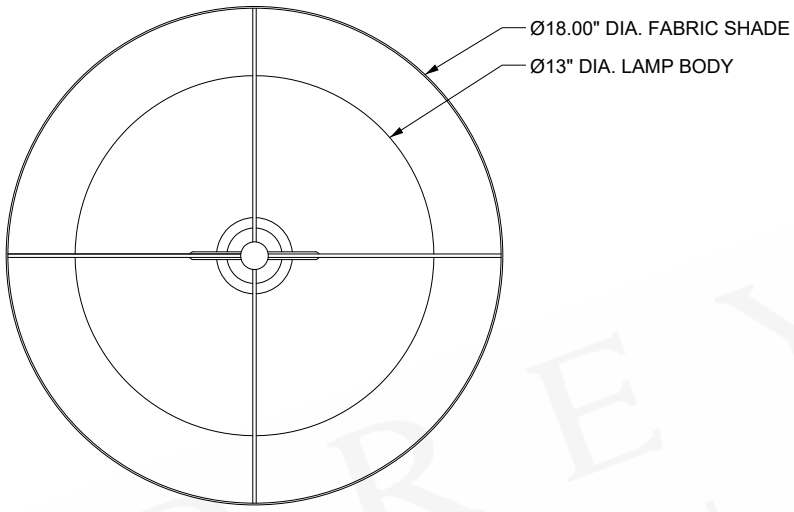

TOP VIEW

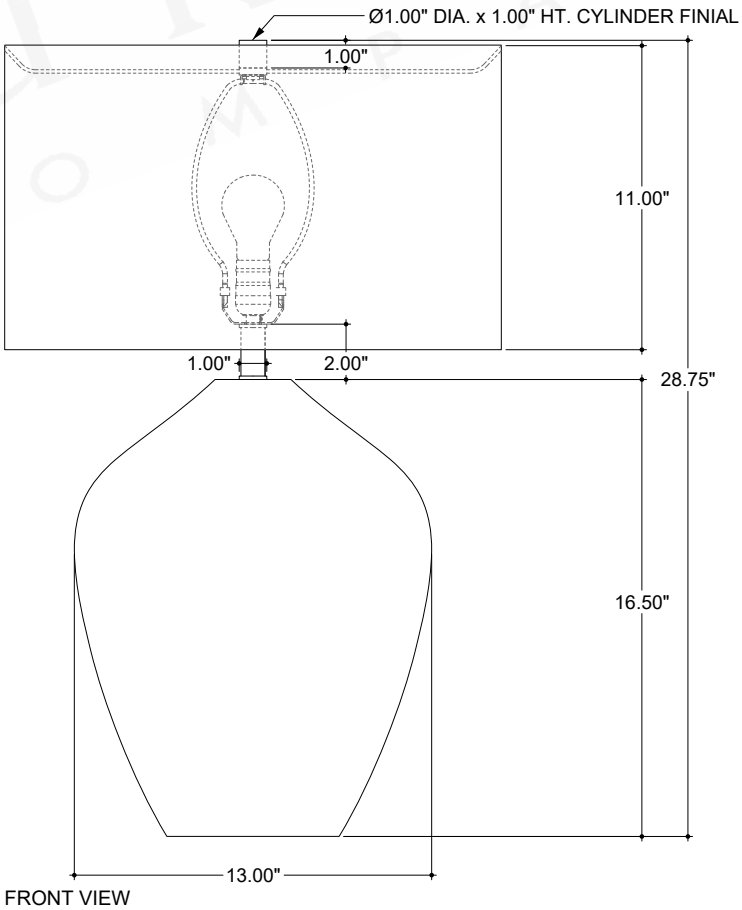

FRONT VIEW

ALL WORK © CURREY & COMPANY