ITEM: 5000-0318

Overall Dimensions

Height: 18.25″
Width: 15″
Depth: 7.75″

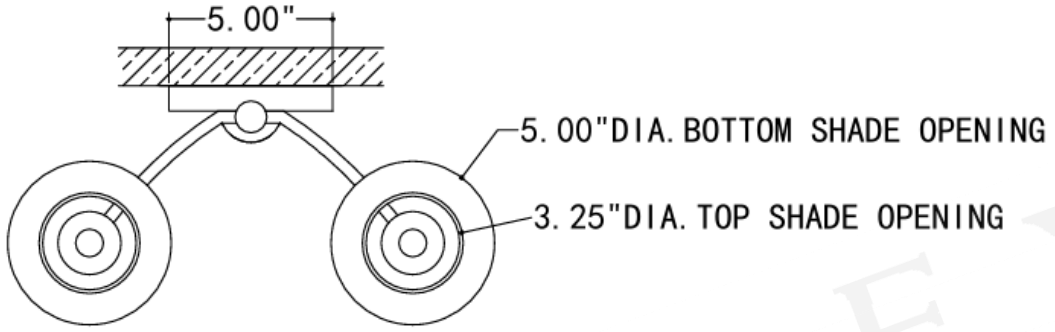

TOP VIEW

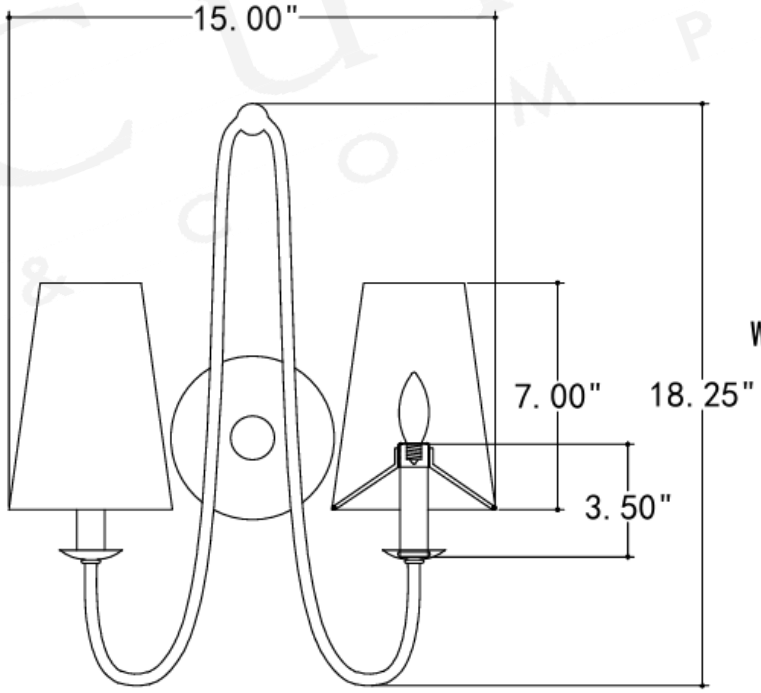

FRONT VIEW

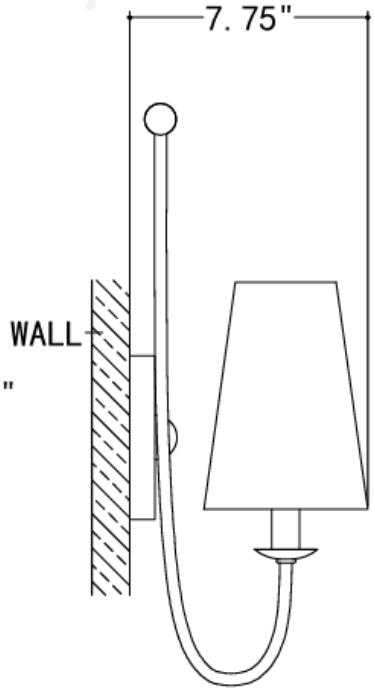

SIDE VIEW

ALL WORK © CURREY & COMPANY