ITEM: 5000-0312

Overall Dimensions

Height: 18.5″
Width: 9″
Depth: 7″

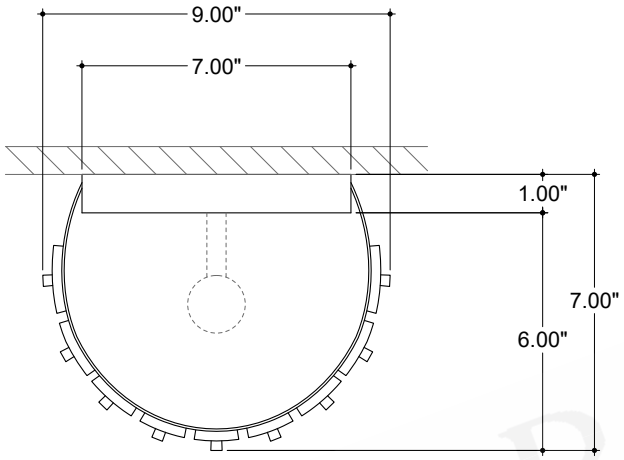

TOP VIEW

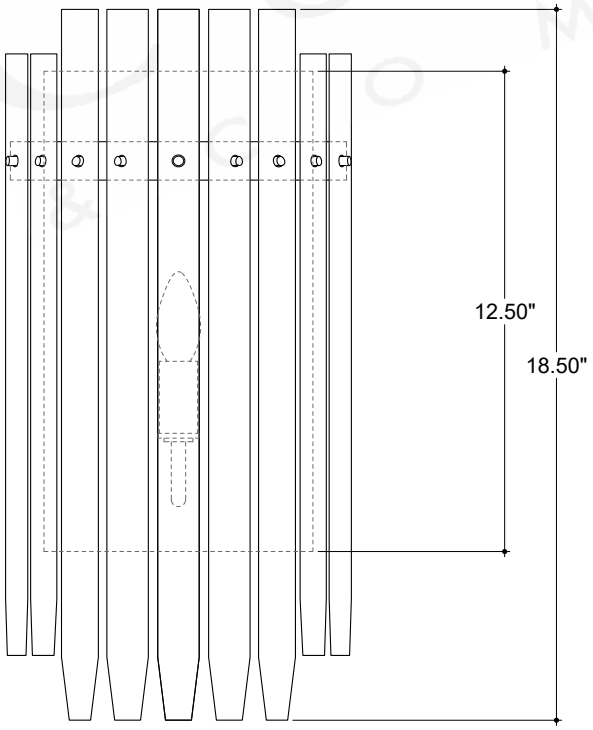

FRONT VIEW

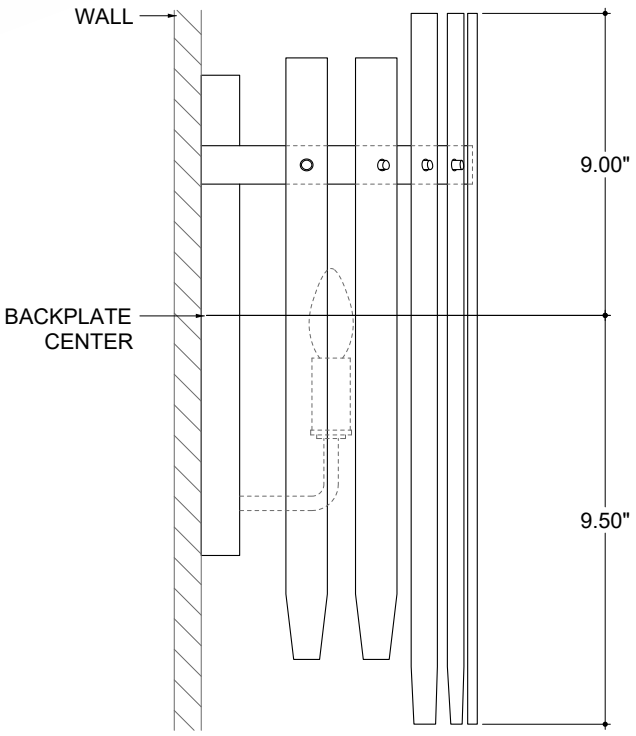

SIDE VIEW

ALL WORK © CURREY & COMPANY